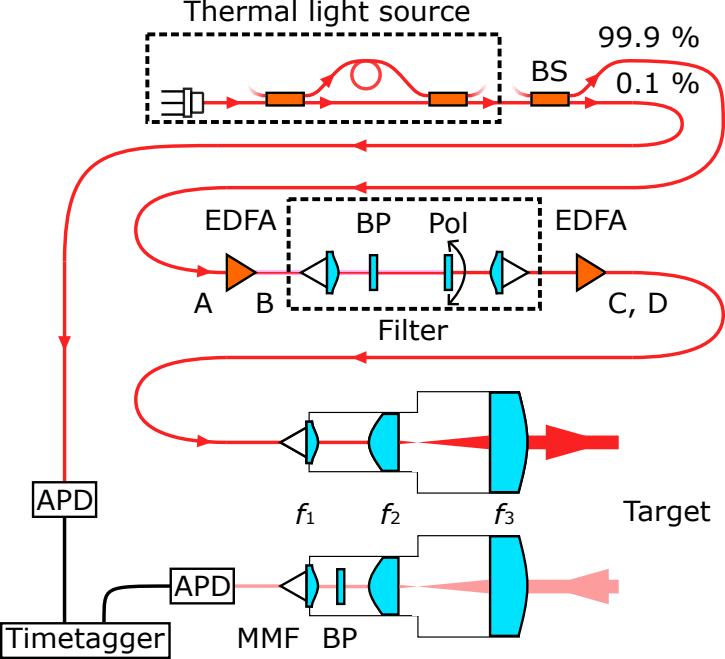
Thermal light source
99.9 %
BS
0.1 %
EDFA
BP
Pol
EDFA
A
B
Filter
C, D
f_1
f_2
f_3
Target
APD
APD
Timetagger
MMF
BP