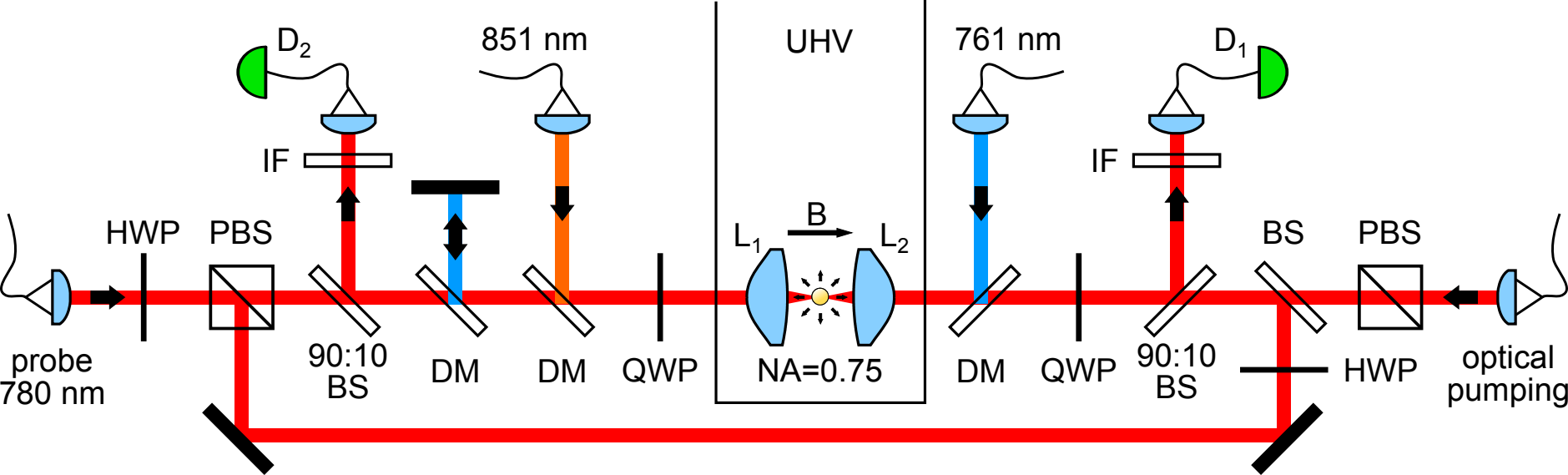
D2
851 nm
UHV
761 nm
D1
IF
IF
HWP
PBS
B
L1
L2
BS
PBS
probe
780 nm
90:10
BS
DM
DM
QWP
NA=0.75
DM
QWP
90:10
BS
HWP
optical
pumping