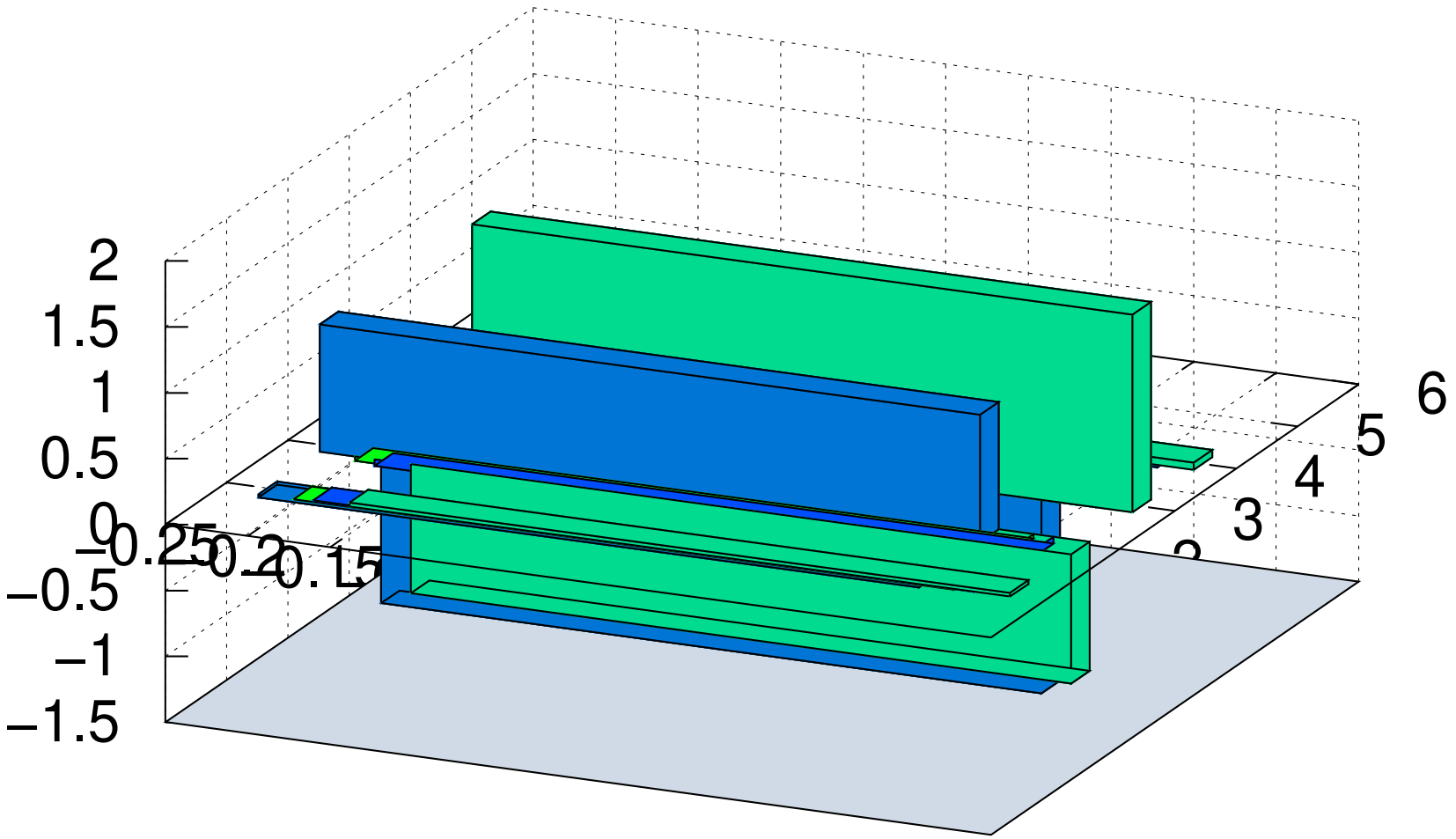give the boxes a 3D depth and correct depth sorting