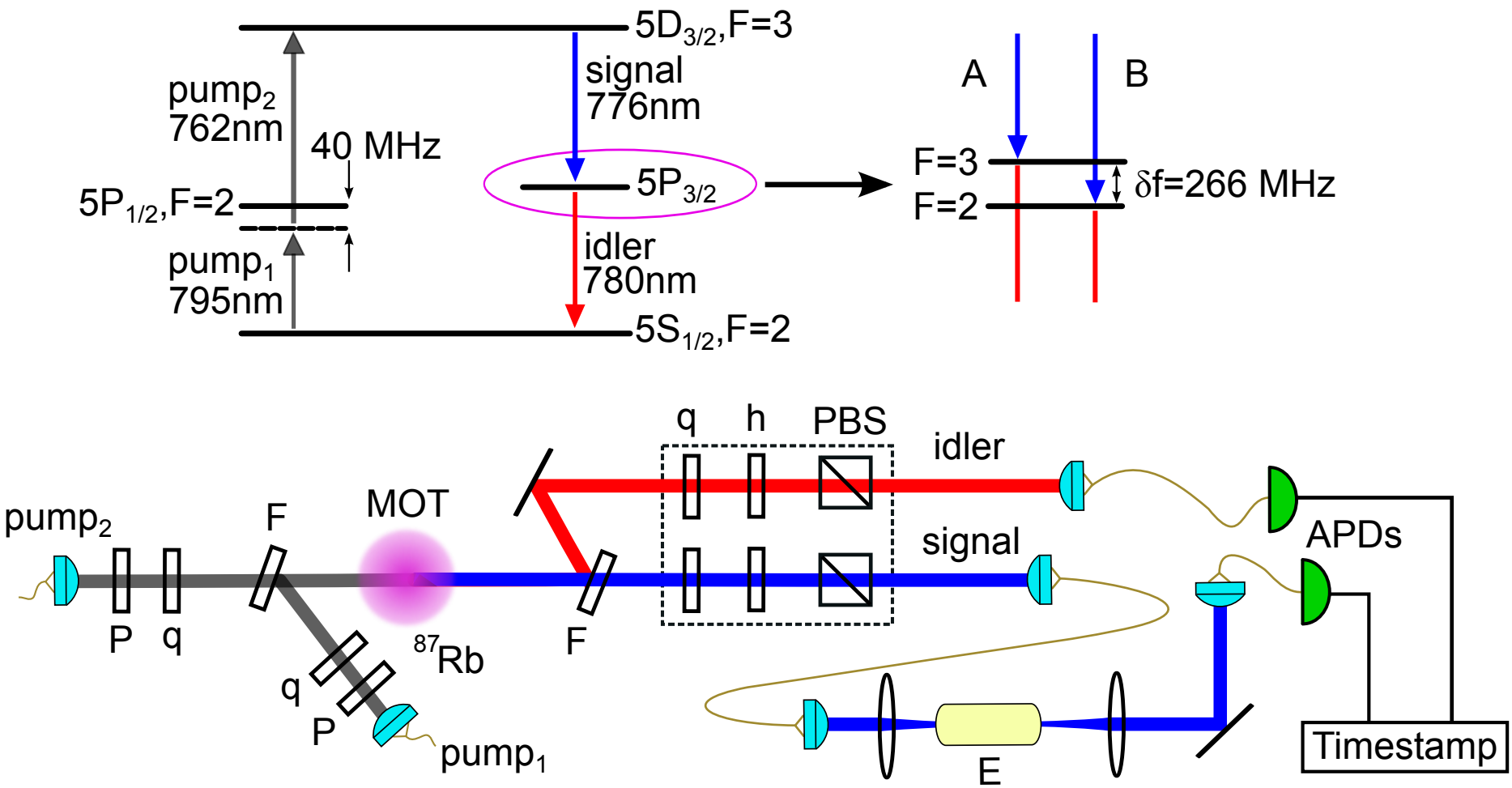
5D3/2,F=3
signal
776nm
pump2
762nm
40 MHz
5P1/2,F=2
5P3/2
idler
780nm
pump1
795nm
5S1/2,F=2
A
B
F=3
F=2
δf=266 MHz
q
h
PBS
idler
signal
pump2
F
MOT
APDs
P
q
87Rb
F
q
P
pump1
E
Timestamp