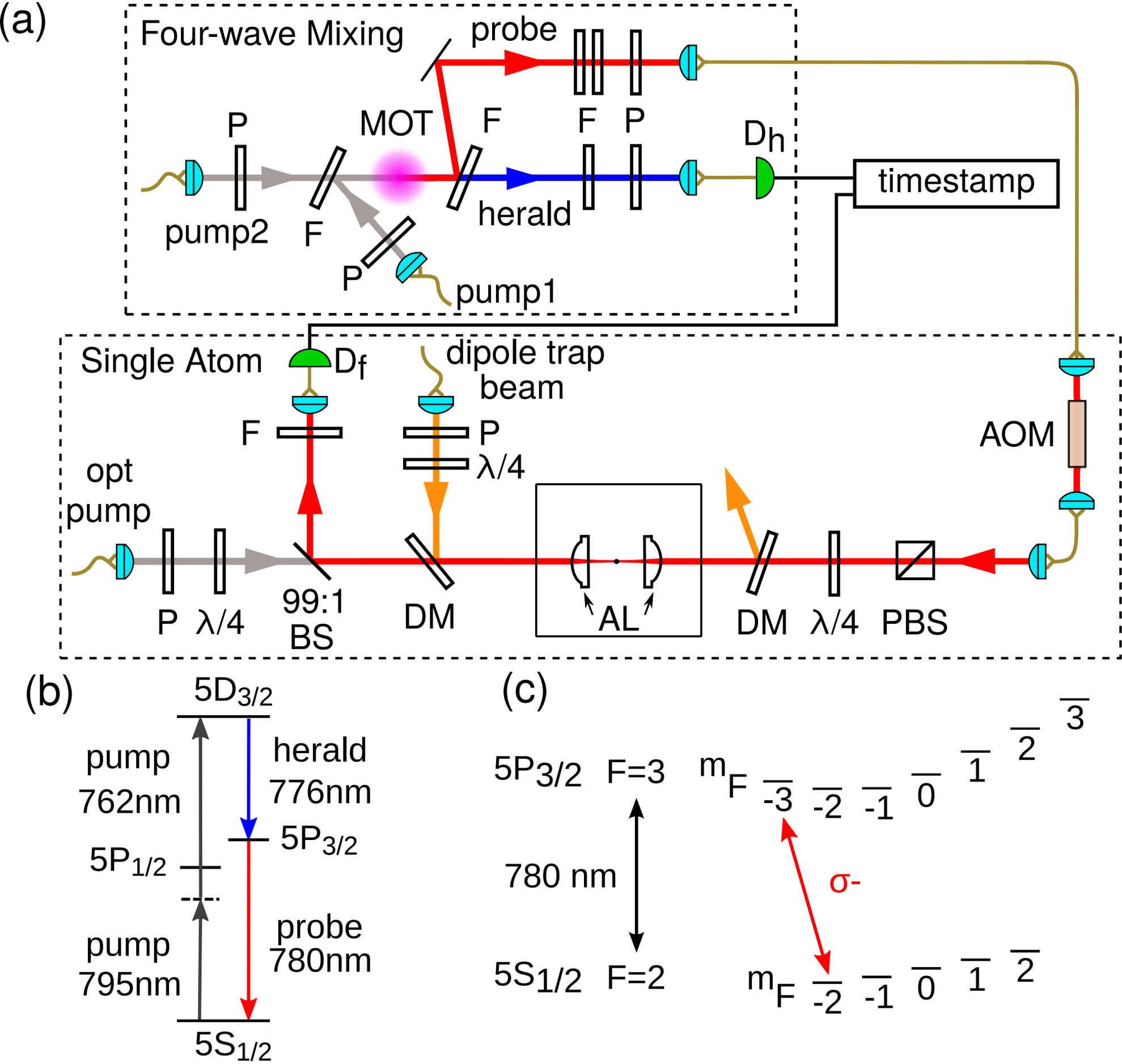
(a)
Four-wave Mixing
probe
P
MOT
F
F
P
Dh
timestamp
pump2
F
herald
P
pump1
Single Atom
Df
dipole trap
beam
F
P
λ/4
AOM
opt
pump
P
λ/4
99:1
BS
DM
AL
DM
λ/4
PBS
(b)
5D3/2
pump
762nm
herald
776nm
5P3/2
5P1/2
pump
795nm
probe
780nm
5S1/2
(c)
5P3/2
F=3
mF
-3
-2
-1
0
1
2
3
780 nm
σ-
5S1/2
F=2
mF
-2
-1
0
1
2